FURNACE CABLE PRODUCTS

RESISTANCE WELDING PRODUCTS

ROBOT DRESS-OUT PRODUCTS AND ACCESSORIES

MOTION CONTROL PRODUCTS

FLEX-CABLE

QUICK REFERENCE CATALOG

1-800-245-3539

WWW.FLEXCABLE.COM

FLEX-CABLE

Worldwide leaders in welding cables and specialty products for over 60 years, Flex-Cable and its divisions are recognized as producers of the most advanced products globally.

Our mission at Flex-Cable is to provide our customers with accurate, on-time delivery of the highest quality parts available in the industry and to improve our company for continued success.

Now ISO 9001 certified

RWMA® MEMBER

AWS American Welding Society

Flex-Cable has been supplying specialty copper cables for the resistance welding industry for more than *60 years* and have recently expanded our product line.

We now offer special fused molecular processed shunts, robotic dress-out products, automation equipment including tip changers, tip dressers and special measuring testing devices. Additionally, our robotics division has made a strong entry into the field of preparation and set-up of robotic systems as well as supplying necessary accessories for the water and air systems.

As a leader in the resistance welding cable and accessory field, Flex-Cable is a major supplier to the global automobile industry and holds a strong presence with Original Equipment Manufacturers (OEM) in the appliance, electronic, and consumer related product industries.

WELDING CABLES
Kickless
Air-cooled
Water-cooled

SHUNTS

ACCESSORIES
Tip Dressers
Tip Changers
Lunch Box

ROBOTIC PRODUCTS

ISO 9001 Certified

KICKLESS

Use of Kickless Cables: Flexibility, longer cable life, less maintenance. Magnetic stresses are essentially eliminated with our six conductor design. Bend and twist are enhanced. Size for size, the conductor arrangement gives approximately 10% more current for a given applied voltage than other available cable types.

Superior Design, Consistent Performance

Flexcel

This state-of-the-art cable employs the latest technology and space-age engineering materials. The patent pending Flexcel® process incorporates a special polymer coated, multi-filament material which covers the individual conductor ropes within the cable that serves to capture and isolate broken strands of copper wire, preventing cooling system contamination and obstructed water flow.

MCM Sizes

300 400 450/500 650 800
Specialty MCMs available upon request

Color-Flex

The Color-Flex cable jacket is made up of a specially formulated six layer natural rubber compound with an abrasion-resistant bumper as an integral part of the jacket, making it completely durable to overcome abrasion and twisting. Construction standards include silver plated terminals to increase conductivity and reduce corrosion.

Complex

Made of a specially designed rubber jacket with ergonomics in mind, an available option would offer individually wrapped internal copper rope(s) with a perforated protective sleeve, which would improve water flow, decrease operating temperature and improve flexibility.

Euro-Flex

Euro-Flex Cables combine all the advantages of safety, abrasion resistance and longer life all in one cable. Perforations and flow space between the wire and material create a unique Thermally Forced Cooling System.

American Power Cable

Combined with proper dress out and a good preventative maintenance program this cable will virtually eliminate down time. The interior construction and outer hose make American Power Cable a hard worker and a true value.

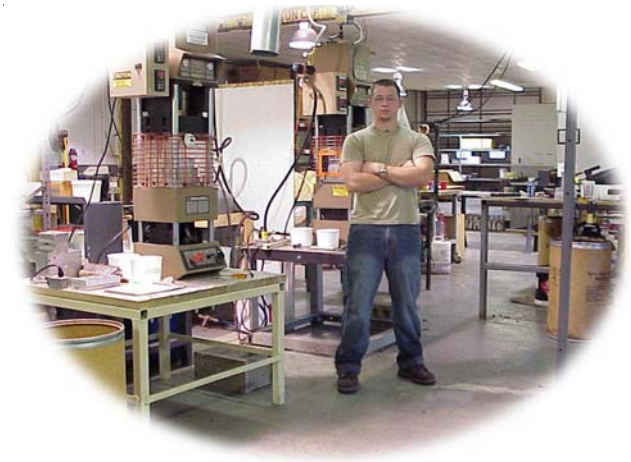

ISO 9001 Certified

KICKLESS CABLE SELECTION GUIDE.

Color-Flex (P.N. Code = LC)

Applications: MEDIUM ROBOTIC USE

Standard Cable for typical robotic applications. The outside hose has a durable rubber blend outer covering which gives good support for the cable while allowing the cable to bend and twist.

American Power Cable (P.N. Code = AP)

Application: MEDIUM TO HEAVY ROBOTIC USE (Good all-round robotic cable)

The best solution for applications that perform many tight bends and twists. The jacket construction is the same as *Color-Flex,* while the interior construction is *Flex-Cell* (individually covered ropes), giving good support and resisting abrasion. While improving flex life, this perforated covering traps broken wire strands, preventing plugged water ports.

Euro-Flex (P.N. Code = UR)

Application: HEAVY TO EXTREME ROBOTIC USE

The best cable for high abrasion situations. This cables has all the benefits of the *American Power Cable* with the addition of a Polyurethane outer layer on the jacket. *Euro-flex* combines all of the advantages of a reinforced rubber hose with the abrasion resistance of urethane and a durable interior creating the highest performing cable ever.

Complex (P.N. Code = CR)

Application: MANUAL GUN USE

This cable is easy to bend and twist for manual gun applications. The cables excellent ability to bend and twist reduces the ergonomic stress on the gun operator while maintaining the safety of a reinforced rubber tube inside.

FLEX-CABLE/NCSI
KICKLESS CABLE ORDER FORM

MCM SIZE	TYPE	TERMINAL 1	TERMINAL 2		LENGTH IN INCHES		OPTIONS
□□	□□	□□□□	□□□□	–	□□□	–	□□

MCM SIZE
30 = 300MCM
40 = 400MCM
50 = 500MCM
65 = 650MCM
80 = 800MCM

CABLE TYPE
LC = COLOR-FLEX
AP = AMERICAN POWER
UR = EURO-FLEX
CR = COMPLEX
LH = HIGH-VOLT

TERMINAL 1
See terminal chart.

TERMINAL 2
See terminal chart.

LENGTH IN INCHES
PLEASE SPECIFY

OPTIONS
S = SILVER PLATING (Standard on LC, AP &UR cables)
E = EXO SYSTEM ON CABLE
SR = STRAIN RELIEF (Installed on Terminal 1 end.) SRSR = (Installed on both ends.)
B = FLEX-CEL CONSTRUCTION
SI = SPECIAL INSTRUCTIONS (ie; rotated terminals, oversized ports, etc.)

EXAMPLE: **40CR017H12RX-120-S**
DESCRIPTION: **10 FT. 400MCM COMPLEX WITH 17H & 12RX TERMINALS, SILVER PLATED CONTACT SURFACES.**

For Technical Support or Questions on our products, Please call a FLEX-CABLE representative at 1-800-245-3539 or email us at sales@flexcable.com

TERMINAL CHART

MOST COMMONLY USED KICKLESS CABLE TERMINALS

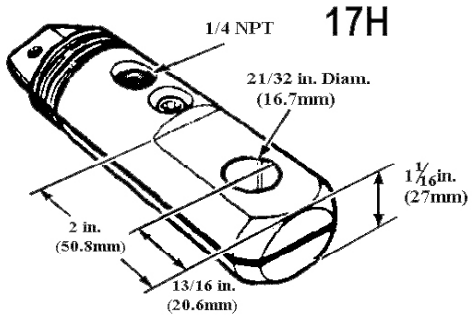

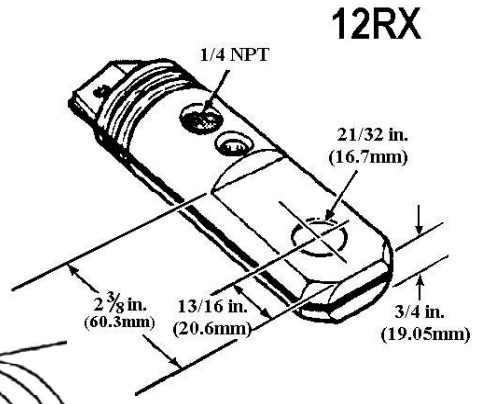

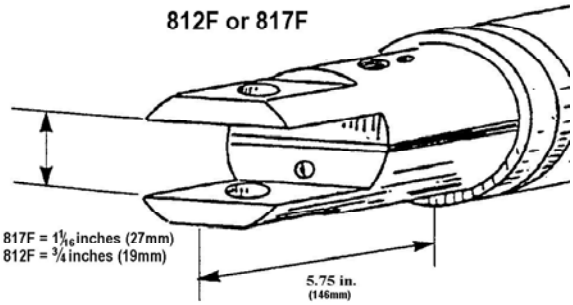

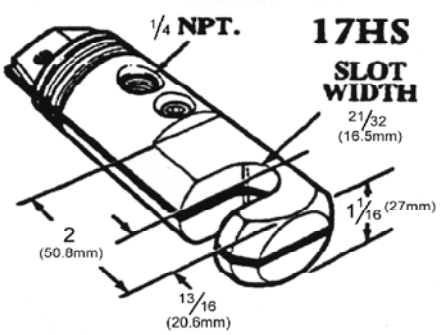

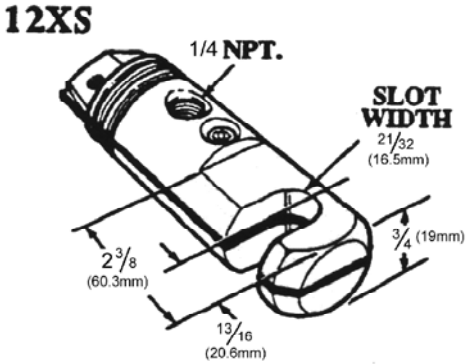

DC WELDING CABLE TERMINALS

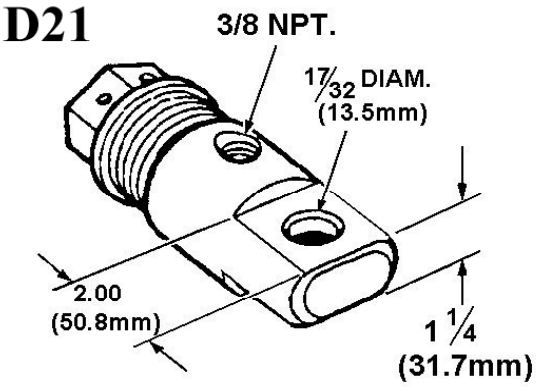

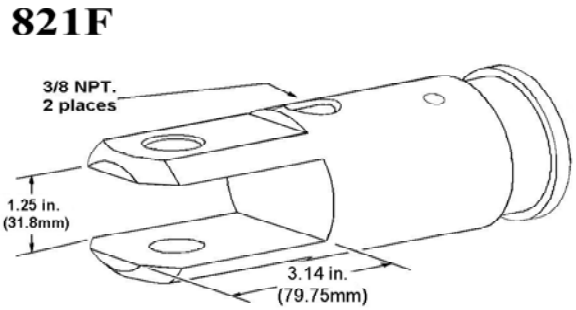

Color-Flex

The Color-Flex cable jacket is made up of a specially formulated six layer natural rubber compound with an abrasion-resistant bumper as an integral part of the jacket, making it completely durable to overcome abrasion and twisting. Construction standards include stainless steel jacket straps and silver plated terminals to increase conductivity and reduce corrosion.

Complex

Made of a specially designed rubber jacket with ergonomics in mind, an available option would offer individually wrapped internal cooper rope(s) with a perforated protective sleeve, which would improve water flow, decrease operating temperature and improve flexibility.

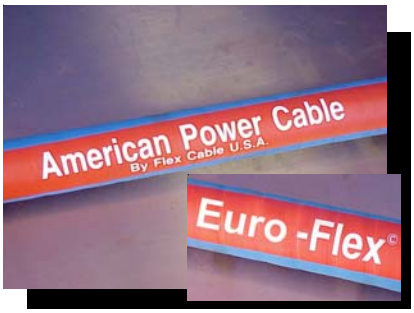

Euro-Flex

Euro-Flex Cables combine all the advantages of safety, abrasion resistance and longer life all in one cable. Perforations and flow space between the wire and material create a unique Thermally Forced Cooling System.

American Power Cable

Combined with proper dress out and a good preventative maintenance program this cable will virtually eliminate down time. The interior construction and outer hose make American Power Cable a hard worker and a true value.

ISO 9001 Certified

FLEX-CABLE/NCSI
WATER-COOLED CABLE ORDER FORM

MCM SIZE	CABLE TYPE	TERMINAL 1	TERMINAL 2	LENGTH IN INCHES	OPTIONS
□□	□□	□□□□	□□□□	□□□	□□

MCM SIZE
35 = 350MCM
40 = 400MCM
50 = 500MCM
60 = 600MCM
75 = 750MCM
10 = 1000MCM

CABLE TYPE
WS = COLOR-FLEX
AP = AMERICAN POWER
UR = EURO-FLEX
CR = COMPLEX

TERMINAL 1
See terminal chart.

TERMINAL 2
See terminal chart.

LENGTH IN INCHES
PLEASE SPECIFY

OPTIONS
S = SILVER PLATING
E = EXO SYSTEM ON CABLE
B = FLEX-CEL CONSTRUCTION
SB = STAINLESS STEEL BANDS
DB = DOUBLE BANDING

EXAMPLE: **35WSW1FW6-22-E**
DESCRIPTION: **22 in. 350MCM COLOR-FLEX WITH W1F & W6 TERMINALS, CABLE WRAPPED WITH EXO.**

For Technical Support or Questions on our products, Please call a FLEX-CABLE representative at 1-800-245-3539 or email us at sales@flexcable.com

TERMINAL CHART

MOST COMMONLY USED WATER-COOLED CABLE TERMINALS

W1

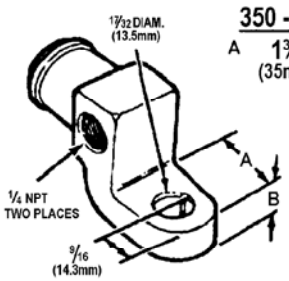

	350 - 500	600	750
A	1⅜ (35mm)	1½ (38.1mm)	1⅝ (41.3mm)

	350-400	500-1000
B	½ (12.7mm)	⅝ (15.9mm)

W1F & W1F-2

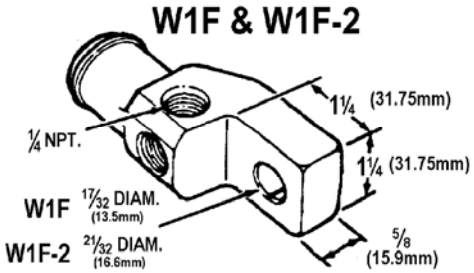

W2

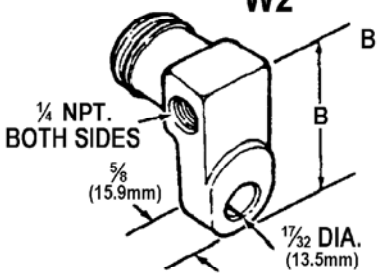

B	350-500	600	750	1000
	2 11/16 (68mm)	3 (76.2mm)	3¼ (82.5mm)	3 11/16 (93.7mm)

W4

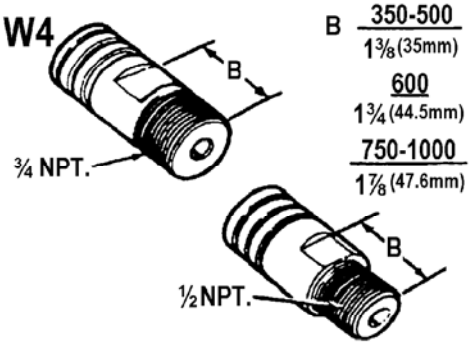

B	350-500	600	750-1000
	1⅜ (35mm)	1¾ (44.5mm)	1⅞ (47.6mm)

W5

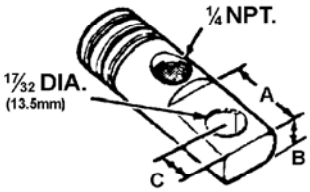

	350-500	600-1000
A	1¼ (31.8mm)	1⅜ (35mm)
B	9/16 (14.3mm)	⅝ (15.9mm)
C	½ (12.7mm)	⅝ (15.9mm)

W6

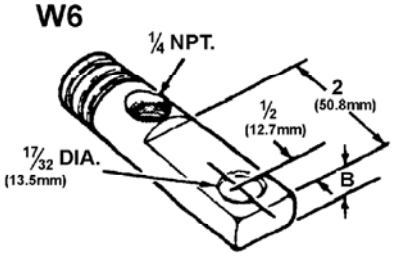

B	350 - 500	600 - 1000
	9/16 (14.3mm)	⅝ (15.9mm)

W6-2

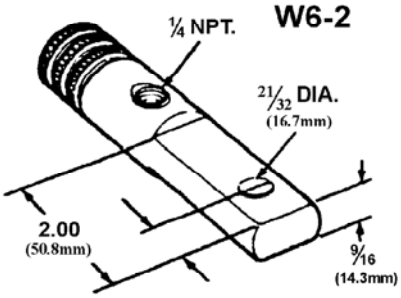

ISO 9001 Certified

WATER COOLED

TERMINAL CHART

MOST COMMONLY USED WATER-COOLED CABLE TERMINALS

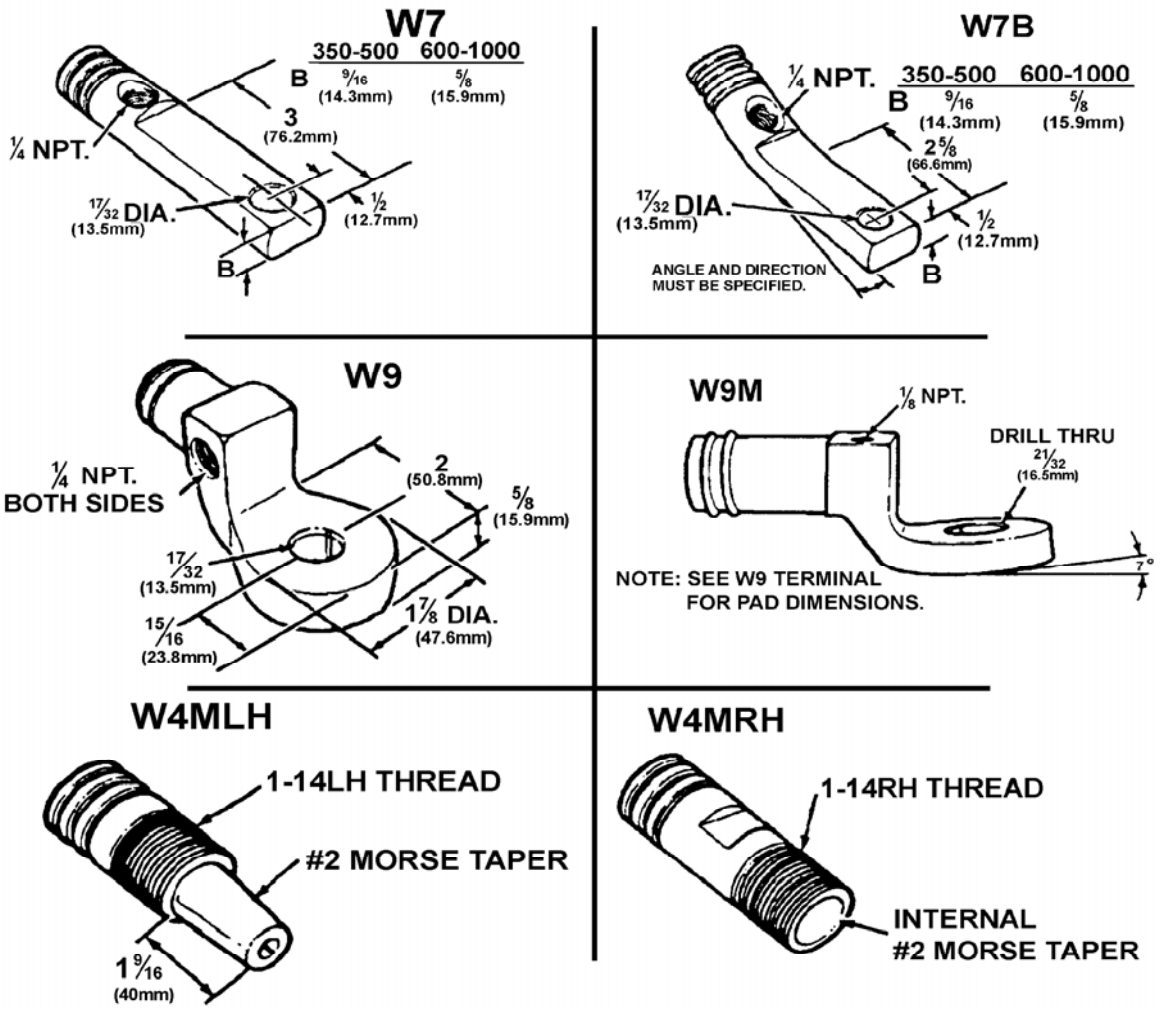

Color-Flex

Color-Flex air cooled jumpers are extra flexible cable rope-type secondary conductors (0.010 inch strands) featuring silver plated connectors swedge-formed on each end. Standard air cooled jumpers are encased in a loose fitting, non-flammable, neoprene impregnated sheath to provide abrasion protection, flexibility and cooling. Color coded for easy identification. Save time in replacement by easily matching the color and identifying the length.

Flex-tra

Flex-tra air cooled jumpers were developed to allow freedom in design for today's automotive and robotic welding applications. Flex-tra utilizes a unique stranding of extra fine gauge (0.005 inch strands) wire which allows the cable to be bent, twisted, looped or even curled under static or dynamic loading. The optional perforated cover enhances flexibility and allows for greater cooling, adding to service life.

IW-Flex

The Individually Wrapped jumper cables are engineered for special applications and flexibility. Advancements include the following:

- Each rope is individually insulated
- Increased flexibility and versatility
- Improved insulation method does not require standard hose cover
- Eliminates frictional wear between adjacent ropes
- Reduces strand failure at rear of terminal

Special Care *and* Individual Testing
is priority with each cable
to insure proper resistance

ISO 9001 Certified

AIR COOLED

FLEX-CABLE/NCSI
AIR-COOLED CABLE ORDER FORM

MCM SIZE	TYPE	STYLE	HOLE DIAMETERS		LENGTH IN INCHES	OPTIONS	
□□	□	□	□□□□ –		□□□ –	□□ –	S

MCM SIZE
40 = 400MCM
50 = 500MCM
60 = 600MCM
75 = 750MCM
10 = 1000MCM
12 = 1200MCM
15 = 1500MCM
20 = 2000MCM

CABLE TYPE
A = COLOR-FLEX
X = FLEXTRA
I = IW-FLEX

STYLE
See Terminal Configuration Chart

HOLE DIAMETERS
1717 = 17/32" and 17/32"
1721 = 17/32" and 21/32"
2121 = 21/32" and 21/32"
x x x x = CUSTOMER SPECIFIED HOLE DIAMETERS

LENGTH IN INCHES
PLEASE SPECIFY

OPTIONS
WK = 1 3/8" terminal width for 400-750 MCM sizes.
P = PERFORATED COVER
E = EXTENDED COLLAR

EXAMPLE: **12AA1721-18-S**
DESCRIPTION: **18 in. 1200MCM COLOR-FLEX WITH 17/32" & 21/32" HOLES IN SILVER PLATED TERMINALS.**

For Technical Support or Questions on our products, Please call a FLEX-CABLE representative at 1-800-245-3539 or email us at sales@flexcable.com

AIR-COOLED TERMINAL CONFIGURATION CHART

Standard terminal width is 1-1/4 in. 1-3/8 in. and 1-1/2 in. are available upon request.
See ordering chart for bolt hole diameters.

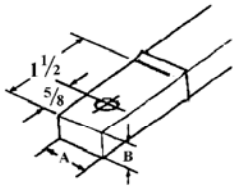

MCM	STANDARD Width 1-1/4 "B" Thickness	1-3/8	1-1/2
400	0.38	0.35	---
500	0.44	0.41	---
600	0.50	0.46	---
750	0.63	0.58	---
1000	0.81	0.74	0.67
1200	0.97	0.88	0.81
1500	1.22	1.11	1.02
2000	---	---	

STYLE A

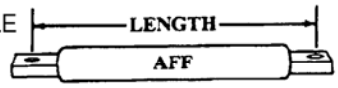

MOST COMMON

STYLE F

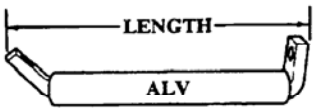

B

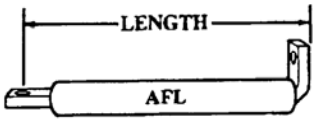

G

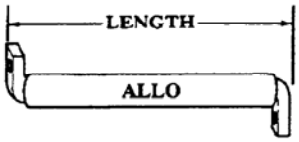

C

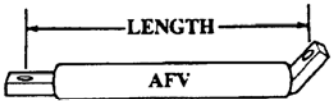

H

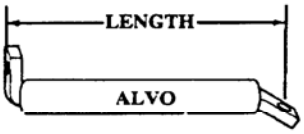

D

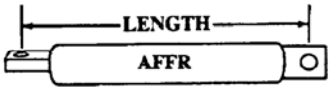

I

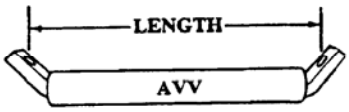

E

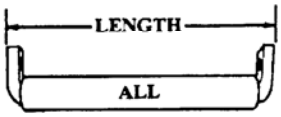

J

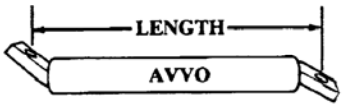

ISO 9001 Certified

SHUNTS

Flex-Cable has recognized the importance of engineering new concepts and improving technology in the laminated shunt field. In light of that commitment, Flex-Cable has improved and expanded its engineering and manufacturing capabilities, now offering many new sizes and configurations of shunts tailored to our customers needs.

Our new fused molecular process, along with a tin plated process, offers the following advantages:

- Extra lubricity between the leaves
- Long term corrosion protection of the leaves
- Low temperature joining process. No fired molecular annealing of the leaves.
- Near perfect joint resistance. Combined joint resistance typically less than 1/2 micro ohm.
- Long shelf life - resulting from low temperatures jointing process, which seals out corrosion. Low resistance is maintained throughout the life of the shunt.
- Improved appearance
- Eliminates the toxic hazard of lead in a soldered joint.
- Computer controlled process gives optimum blousing.

SHUNT ORDER FORM

FLEX-CABLE

CUSTOMER

CUSTOMER PART #

FLEX-CABLE CODE #

Cust. Approval

Work Order #

1 SHUNT TYPE

PLEASE MARK TYPE (ONE ONLY)

☐ C/J

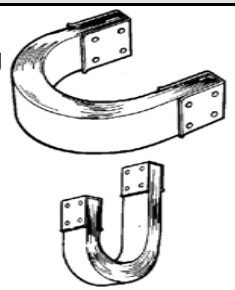

☐ S/F

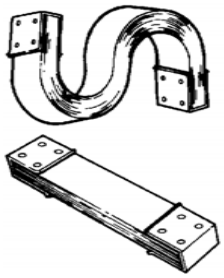

☐ L

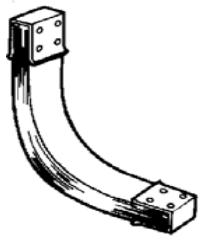

☐ Special (See Print)

PRINT #

2 DIMENSIONS

inch / mm

ENTER DIM. AFTER EACH FIGURE

THICKNESS

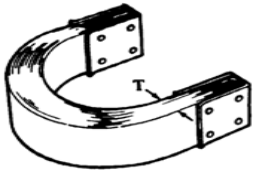

WIDTH

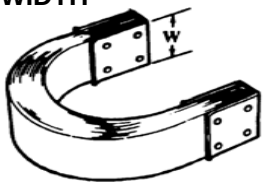

OUTSIDE LENGTH

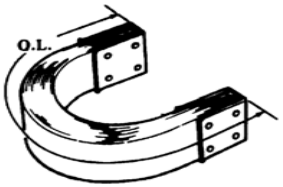

INSIDE LENGTH (OPTIONAL)

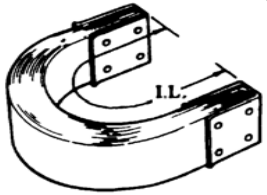

BLOUSING THICKNESS WILL BE APPROX. 1.5 X T IF INSIDE LENGTH IS NOT SPECIFIED

3 HOLE SPECIFICATIONS

MARK HOLE PATTERN (ONE FOR EACH END)

END 1 | END 2

☐ SLOT | SLOT ☐

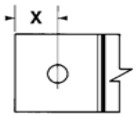

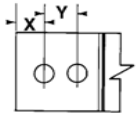

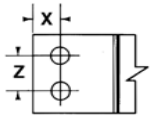

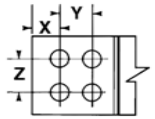

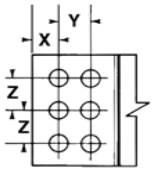

SPECIAL (SEE PRINT)

HOLE DIMENSIONS SEE FIG. ABOVE

END 1	END 2
X =	= X
Y =	=Y
Z =	= Z

HOLE / SLOT SIZE

END 1	END 2

4 END TREATMENT

CHECK END TREATMENT (ONE FOR EACH END)

END 1 | END 2

☐ FUSED / BONDED (default) ☐

☐ PLATE ☐

☐ LOOSE ☐

☐ OTHER (SEE PRINT) ☐

5 PLATE INFORMATION

OUTSID | INSIDE

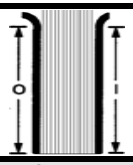

END 1 | END 2

PLATE DIMS (BLANK FOR NONE)

O=	=O
I=	=I

PLATE THICKNESS

DEFAULT IS 1/16"

☐ 1/16" 1.6mm ☐ 1/8" 3.2mm

☐ 3/16" 4.8mm ☐ 1/4" 6.4mm

MARK YES FOR FLARING

FLARE IS 1/4" AT 45° (6mm)

END 1		END 2
INSIDE FLARE		
☐ YES	YES	☐
OUTSIDE FLARE		
☐ YES	YES	☐

☐ SPECIAL FLAIR (PRINT)

6 OPTIONS / FINISHING

MATERIAL THICKNESS (REQUIRED)

☐ 0.003

☐ 0.005

☐ 0.010

.005 is default for shunts less than 2" wide.

.010 is default for shunts greater than

1/2-HARD TIN COATED C-110 IS DEFAULT FOR ALL SHUNTS

MARK YES FOR SILVER PLATING

END 1		END 2
INSIDE SILVER PLATING		
☐ YES	YES	☐
OUTSIDE SILVER PLATING		
☐ YES	YES	☐

MARK COATING (OPTIONAL)

FIBERGLASS SHIELD		
☐ INSIDE	OUTSIDE	☐
TEFLON TAPE		
☐ INSIDE	OUTSIDE	☐

Comments

ACCESSORIES

More products available for your needs

OPPORTUNITIES:

Reduce Down Time

Solve Your Manufacturing Needs

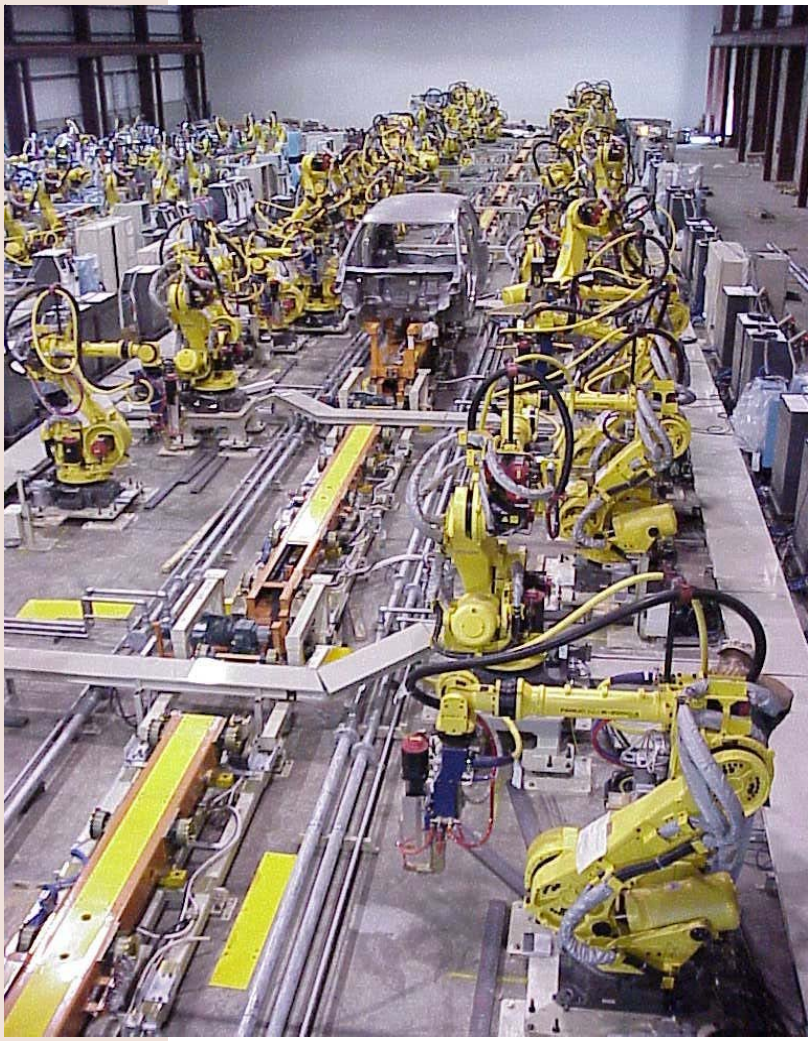

We Do It All !

Including Field Service Globally

ROBOTICS

ISO 9001 Certified

ROBOTICS

ROBOTICS

Robo-Com V provides a platform to control and organize power, air and water for robotics, as well as other applications. Robo-Com V is tailor-made to fit your specific needs. This technology helps create an innovative technological system for your industrial needs. The end result is minimal maintenance and less down time.

We put technology to work developing new products, from robotic accessories and dress out to machining special parts.

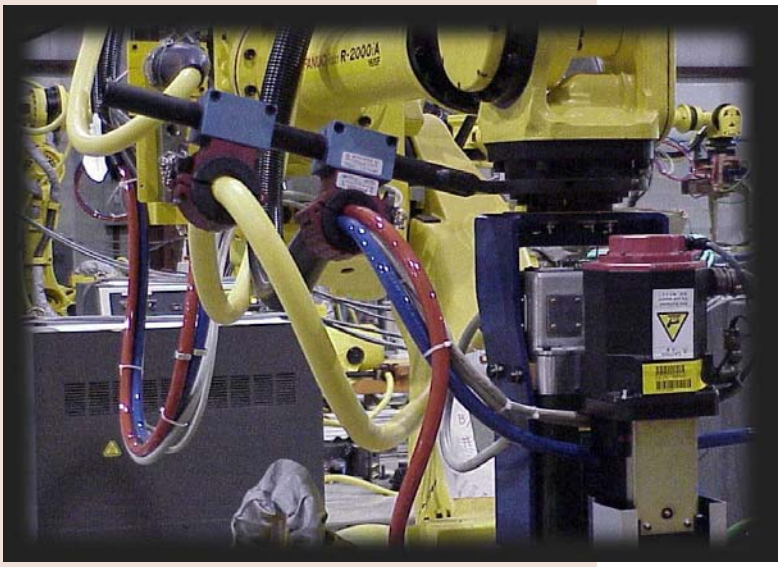

Flex-Cable doesn't just make products, we solve problems in the manufacturing sector for our customers.

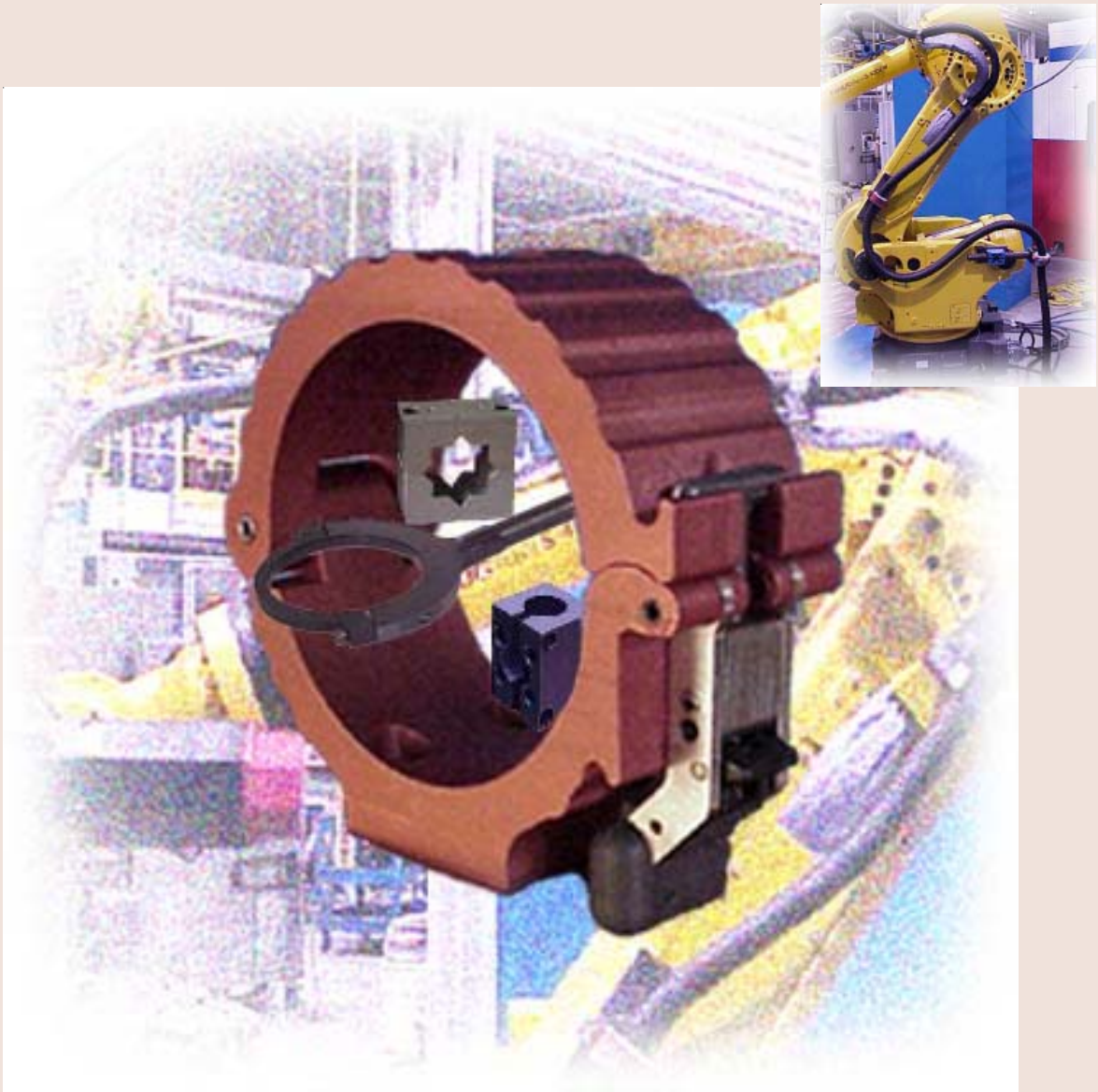

Quick Release Clamp:
Something New for Your Manufacturing Needs

Stock on Wheels
For Quick Response

ISO 9001 Certified

AUTOMATION

Manage Your Manufacturing Needs

Robotic Automated Weld Cap Changer

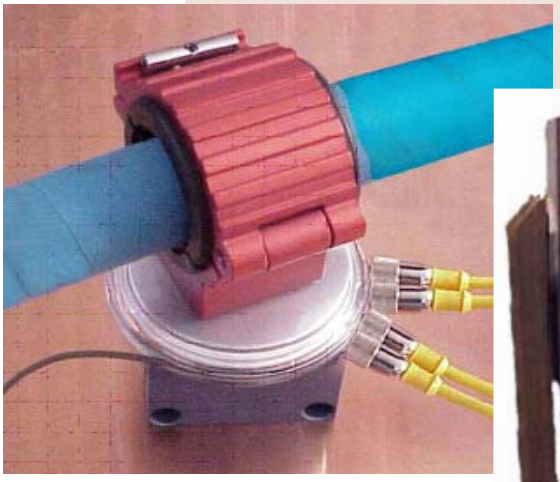

'Vision' Weld Parameter Verifier

Weld Cap Dresser 480 or 110 Volts AC

Weld Cap Verification Fixture

AUTOMATION

ISO 9001 Certified

FLEX-CABLE

NEW PRODUCT BULLETIN

NEW MAINTENANCE FREE ELECTRODE DRESSING

THE RTD-200

with optional:

FLEX-I-SENSE* TECHNOLOGY

ISO 9001 Certified

FURNACE PRODUCTS AND SPECIAL MACHINING

Furnace Cables / Services
The furnace power lead cables are manufactured with 100% conductivity stranded copper wire and available in sizes 70 - 2500 MCM. The cable is then encased in an abrasion resistant engineered external rubber hose with a 15,000 volt dielectric rating. Machining and fabrication of copper electrode holders, terminals, tuyeres, adapters, buss systems and Delta closures as well as stainless steel, fixtures, die repair and mast arms is available.

Special Machining
We also specialize in machining copper and other non-ferreous materials. Welding services provided include SMAW, gas welding, flame cutting, plasma cutting, GTAW, GMAW, gouging and silver brazing. Metallic materials include; copper, stainless steel, steel, monel, aluminum, brass, and bronze. Composites: Kevlar, fiberglass, teflon, rubber, polyester (spun and mono), nylon, and Romex.

MECHANICAL PIECES & PARTS
Metal
Plastic

CNC

FURNACE PRODUCTS
Steel Mills
Foundries

ISO 9001 Certified

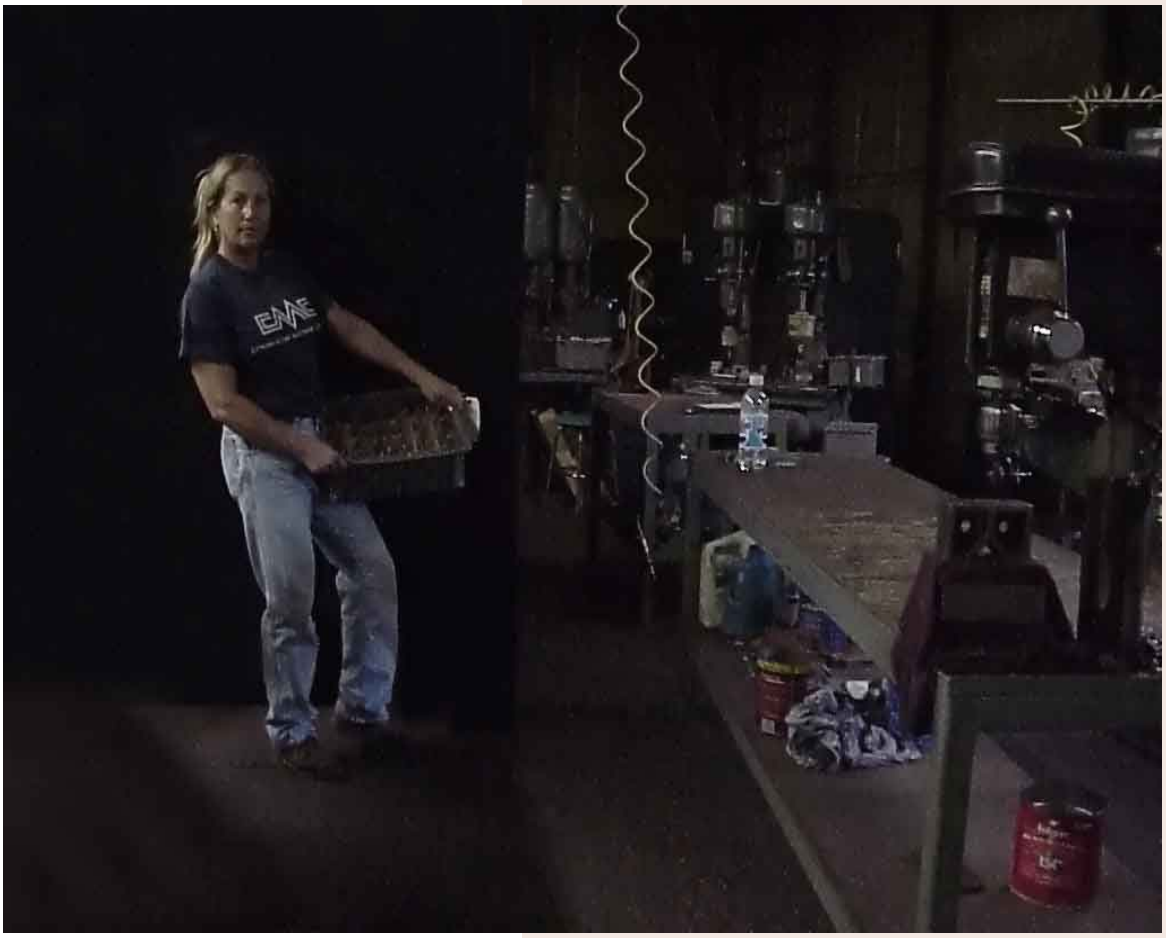

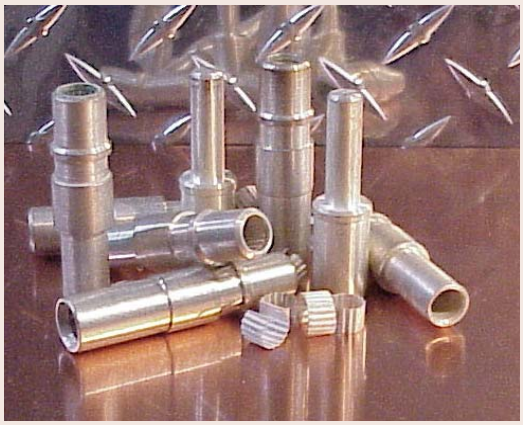

ISO 9001 Certified

PIECES AND PARTS

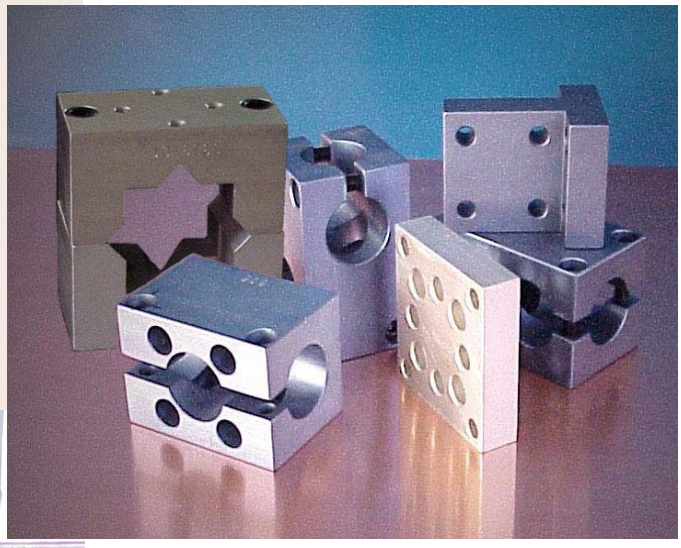

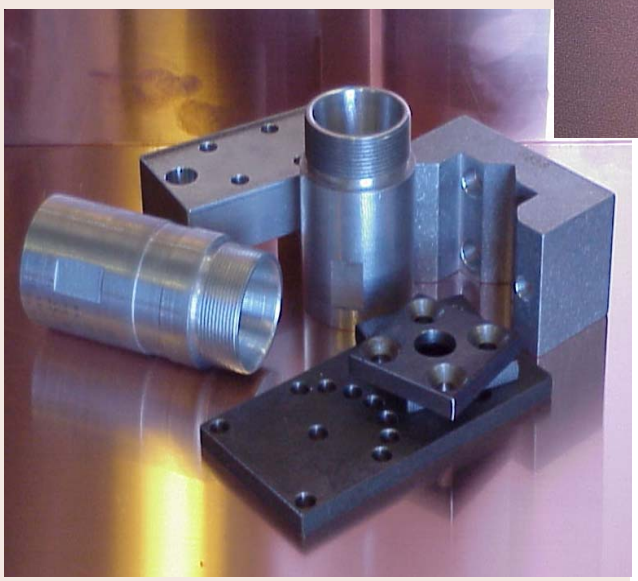

SPECIAL MACHINING

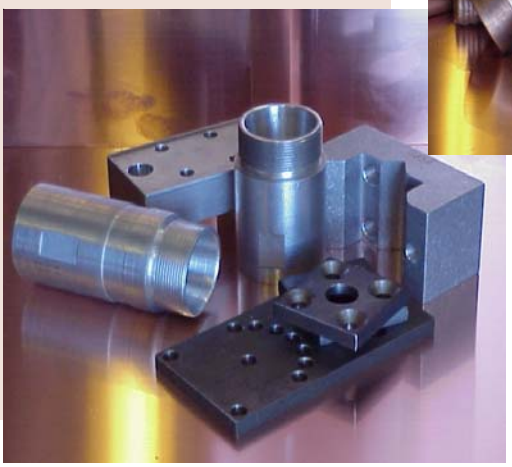

SPECIAL MACHINING

ISO 9001 Certified

Short and Long Production Runs

Let Us Quote Your Needs

Custom Cables

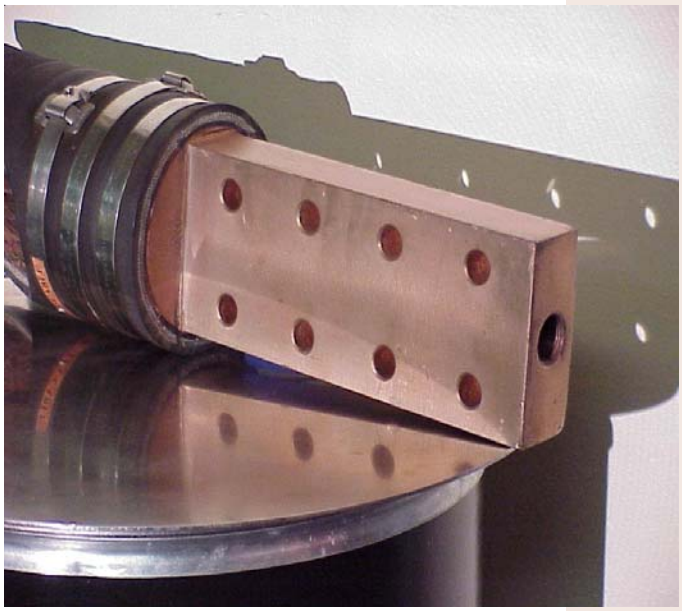

We Make All Types

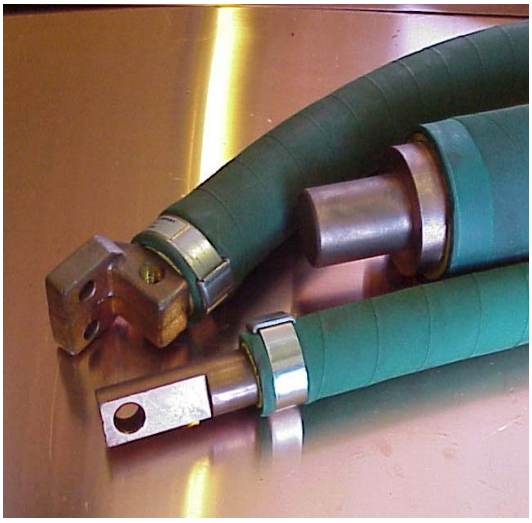

ISO 9001 Certified

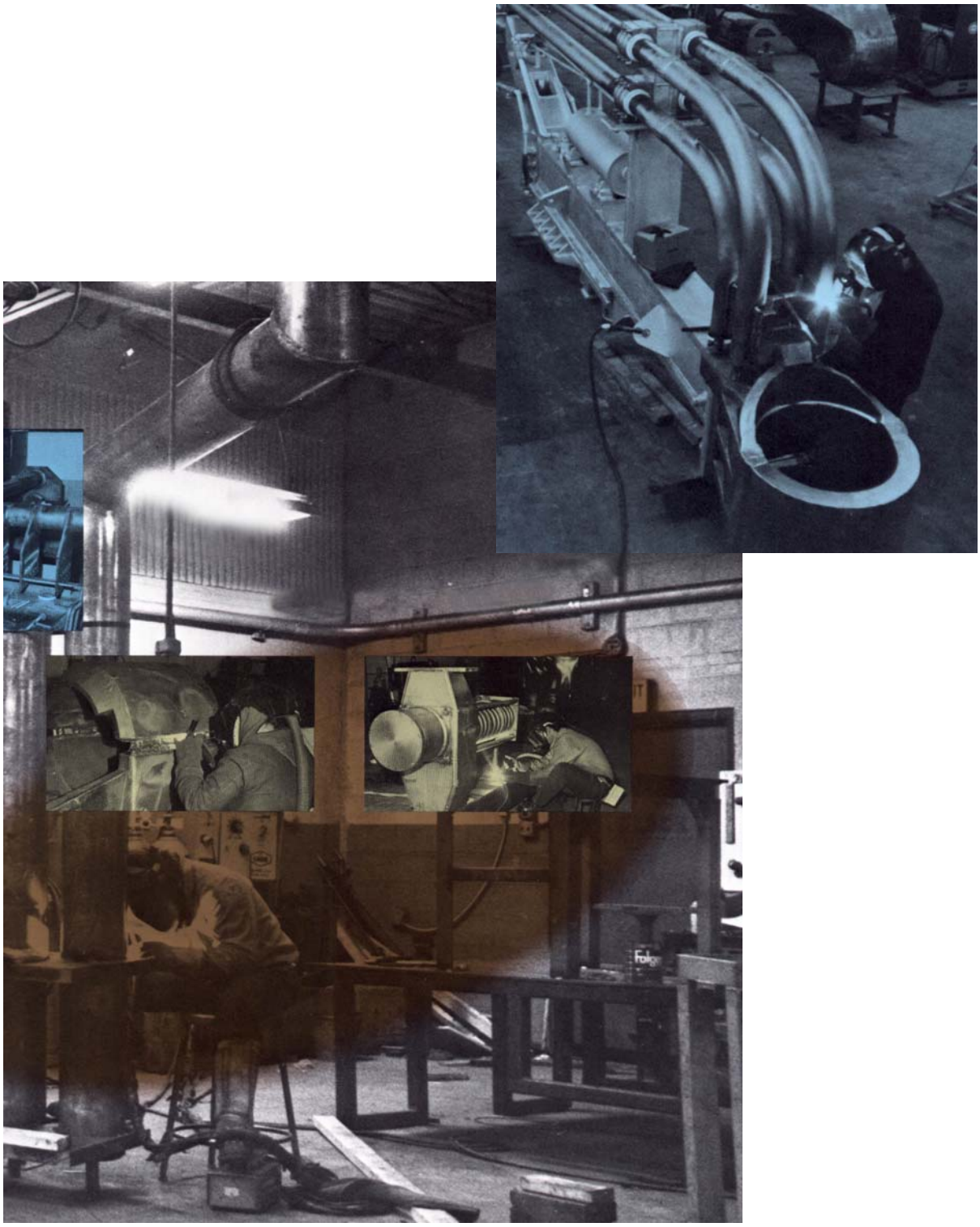

CUSTOM CABLES AND ELECTRONICS DEPARTMENT

CUSTOM CABLES

Flex-Cable has maintained its market position for over 60 years. Our high quality and quick delivery as well as advanced engineering provide our customers with solutions to specific applications.

Cable Assemblies: Multi-conductor, discrete wire, or specially engineered wire are integrated into a finished cable assembly or wire harness. Flex-Cable presently supplies products to the automotive, robotic, heavy equipment, telecommunications and other commercial fields.

Cable & Wire: We stock a full line of cable & wire jacketing, PVC, PUR, rubber, teflon, TPE, and TPR special specification, supplied to all commercial and individual needs. We offer circular and rectangular as well as process molded.

Custom Process Molded: Full line of custom process molded cable, circular, rectangular, servo, encoder, motor coupler - engineering plastics. Present users: Medical, Robotic, Food, and Automotive industries.

Flex-Cable *specializes in Qwik-Change, S-Series, M-Series, and H-Series assemblies for robotics and automotive. Our facilities are equipped with the latest technology for design and development of any customer requirement in a timely and cost effective manner.*

Wire Reels

Terminals

Standard Products

Plastic Molded Products

Prime Link

Harding

Servo Cables

Other

ISO 9001 Certified

Custom
Lengths

Custom
Specifications

ISO 9001 Certified

OVER-MOLDED CABLE ASSEMBLIES

Circular
A Line
B Line
Military
D Sub Molding

Molded Servo Power Cables
Molded Servo Encoder Cables
Molded Servo Brake Cables
Break-Out Boards
Converter Boards

ISO 9001 Certified

Lunch Box

Micro Resistance Meter

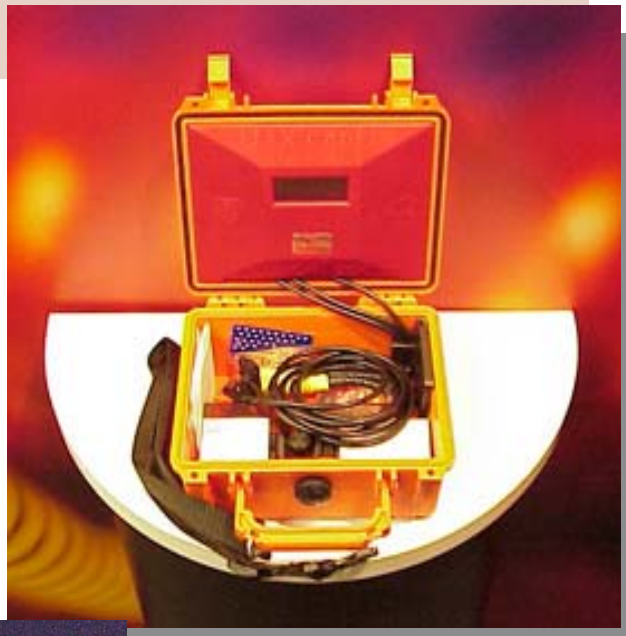

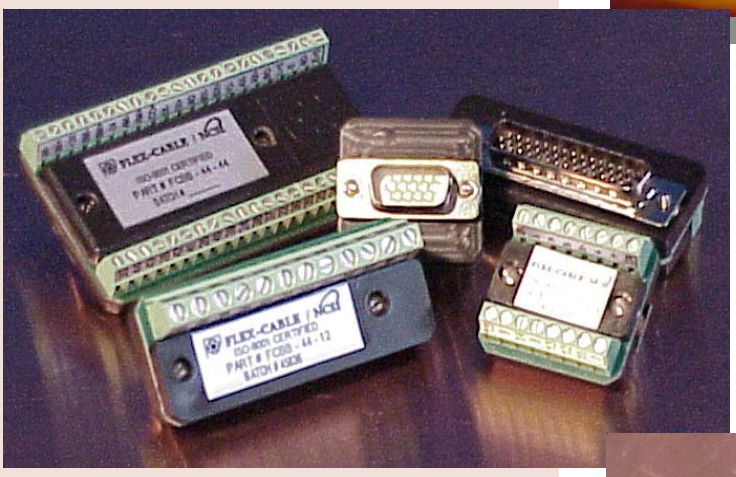

Low Profile Servo-Motor

Breakout Boards

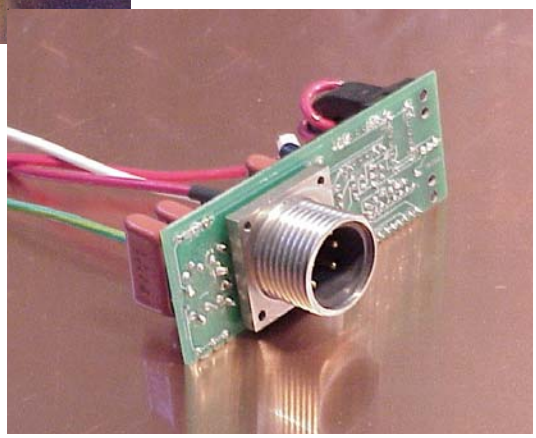

Current Sensing

Flex-i-Sense

ISO 9001 Certified

WIRE REELS/TERMINALS/STANDARD PRODUCTS

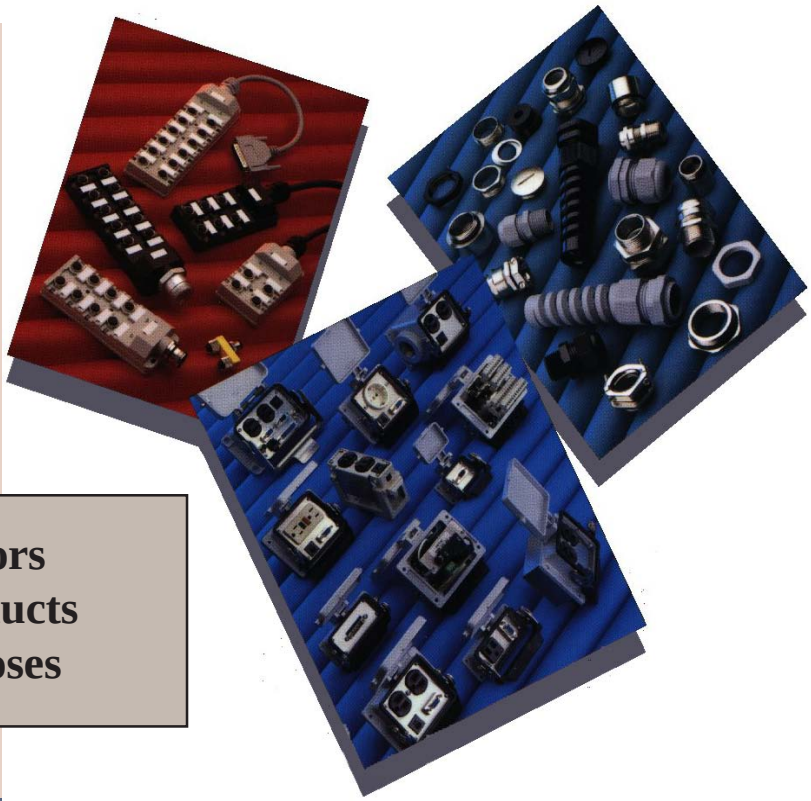

Multipole connectors and connection products for industrial purposes

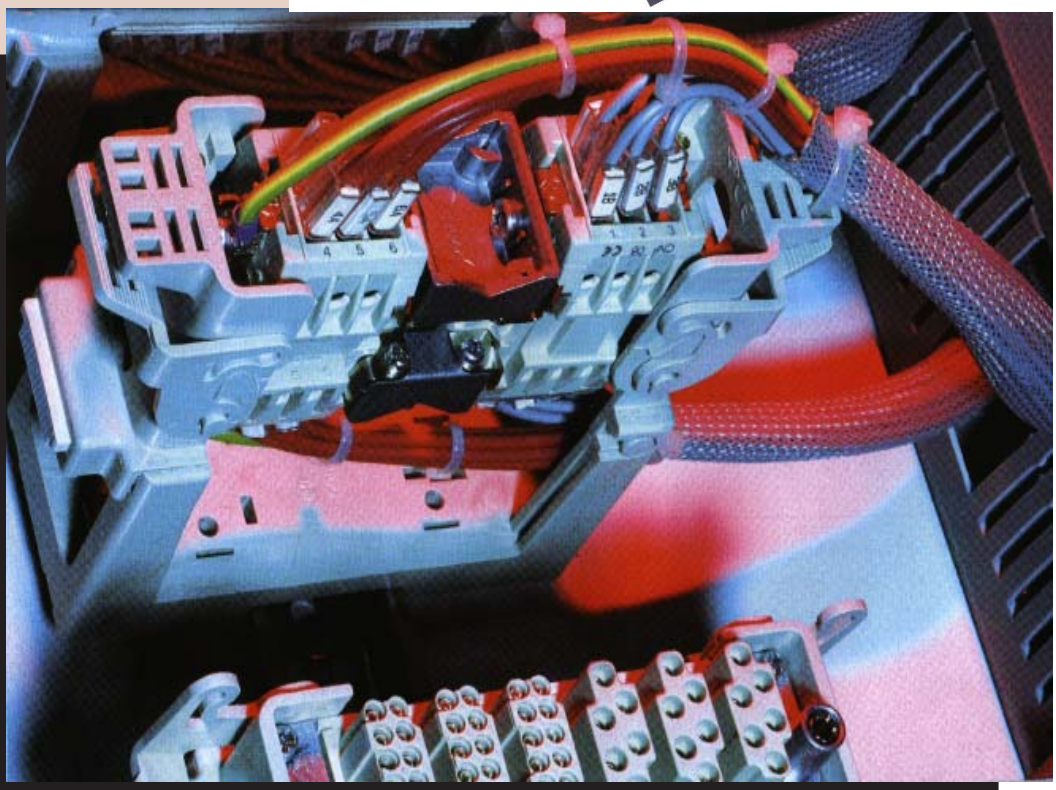

ISO 9001 Certified

CONNECTORS

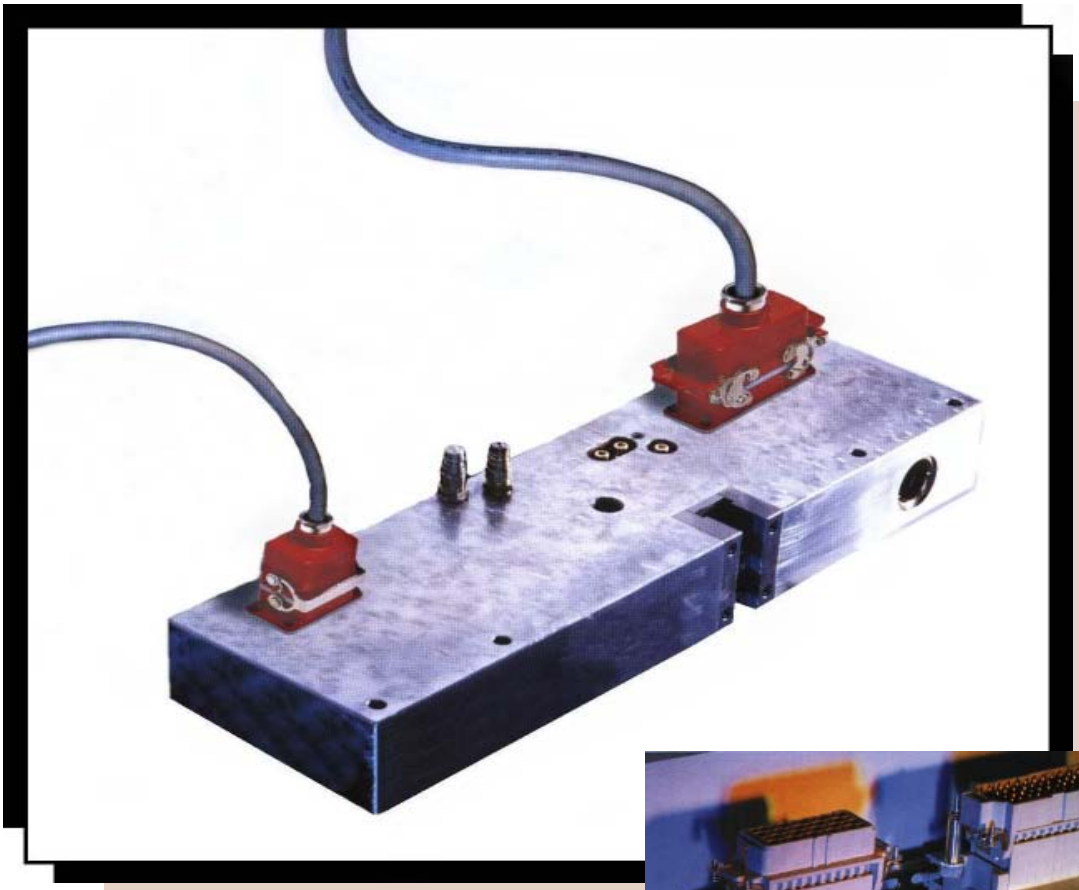

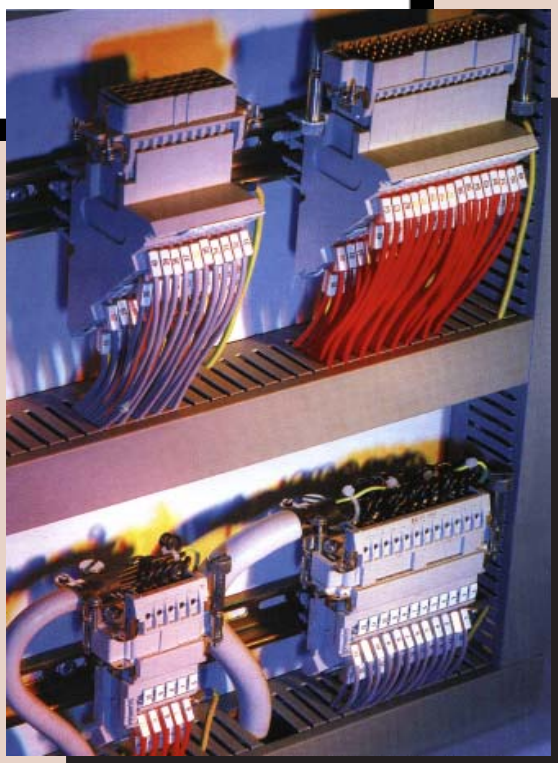

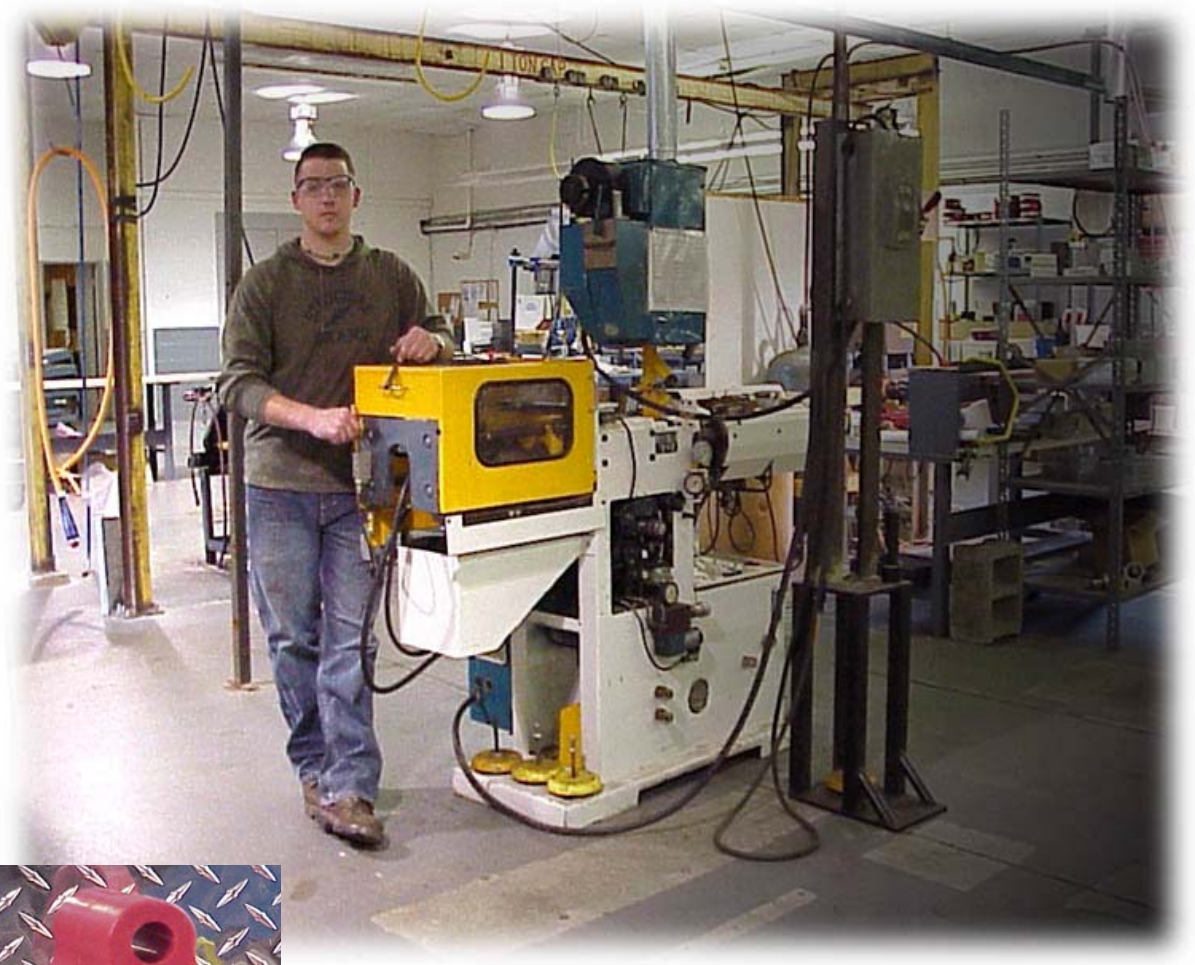

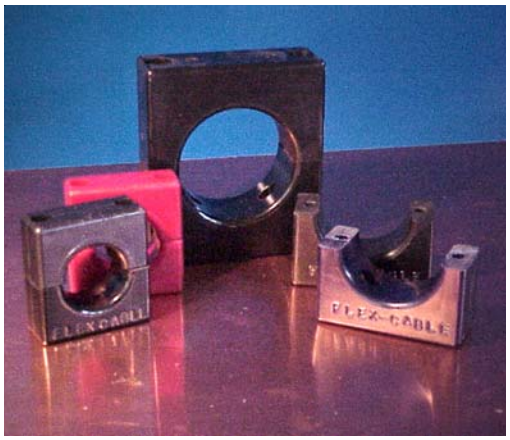
FLEX-CABLE
FLEX-CABLE

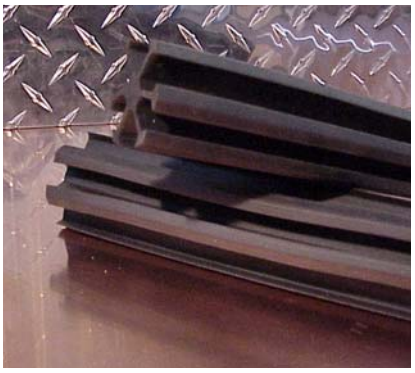

Custom Molding For You

FULL PRODUCT LINE

FULL PRODUCT LINE

KICKLESS CABLES

- COLOR-FLEX
- EURO-FLEX
- COMPLEX
- FLEX-GUARD
- AIR-FLEX
- DC-FLEX
- Y-FLEX
- AMERICAN POWER FLEXCEL
- FLEXCEL
- INDUCTION HEATING CABLE

WATER COOLED CABLE

- COLOR-FLEX
- COMPLEX
- FLEX-GUARD
- FLEX-CEL
- CROSS-FLEX
- AMERICAN POWER FLEXCEL

AIR COOLED CABLES

- COLOR-FLEX
- FLEXTRA
- IW-FLEX
- FORCED-AIR
- BRAID-FLEX

LAMINATED SHUNTS

- TINNED COPPER MADE TO ORDER
- TEF-FLEX

FULL PRODUCT LINE *cont'd*

ROBOCOM V
ROBOT DRESSOUT

- CLAMPS
- GROMMETS
- BOOM BARS
- BRACKETS
- CABLE ADAPTERS
- MOUNTING PLATES & ADAPTERS
- CABLE PROTECTIVE COVERINGS
- ROBO HARNESS
- BUSS BARS
- AIR & WATER LINES
- HOSE FITTINGS
- SQUEEZE LOK
- ***COMPLETE DRESS-OUT PACKAGES***
- ***CUSTOM ASSEMBLIES***

MEASURING DEVISES

- MICRO OHM METERS
- MILLI OHM METERS
- TEMPERATURE GUNS

ELECTRONIC ASSEMBLIES

- MONITOR CABLES
- PRINTER CABLES
- COAXIAL CABLES
- ETHERNET CABLES
- TWINAX CABLES
- V.35 CABLES
- RIBBON CABLES
- MODEM CABLES
- CUSTOM CABLES

ISO 9001 Certified

FULL PRODUCT LINE *(cont'd)*

INDUSTRIAL CABLE ASSEMBLIES

- PRIME-LINK
- MOLDED CABLES & CONNECTORS
- S-SERIES (CROSSES TO SINE "A" LINE)
- M-SERIES (CROSSES TO SINE "V" LINE)
- H-SERIES (CROSSES TO SINE "X" LINE)
- R-SERIES (HARTING & CONTACT)
- QUICK DISCONNECT CABLE SYSTEM
  (FOR UTILIZING TRANS GUNS OR TOOL CHANGERS)
- AMPHENOL (MILITARY)

PRECISION MACHINING, FABRICATING & WELDING

- TIP CHANGER
- TIP DRESSER

BULK WIRE & CABLE

- 2/3 PRIMARY CABLE
- 4/3 PRIMARY CABLE
- 6/3 PRIMARY CABLE
- STANDARD FLEX
- CONTINUOUS FLEX
- TFFN WIRE
- LERC COMMUNICATION CABLE
- PRIME-FLEX
- SLIP-N-SLIDE HIGH PERFORMANCE PRIMARY CABLES

INDUCTION FURNACE CABLE

CUSTOM CUTTING & STRIPPING FROM 2AWG TO 28AWG

WE BRING TECHNOLOGY TO YOU.

ISO 9001 Certified

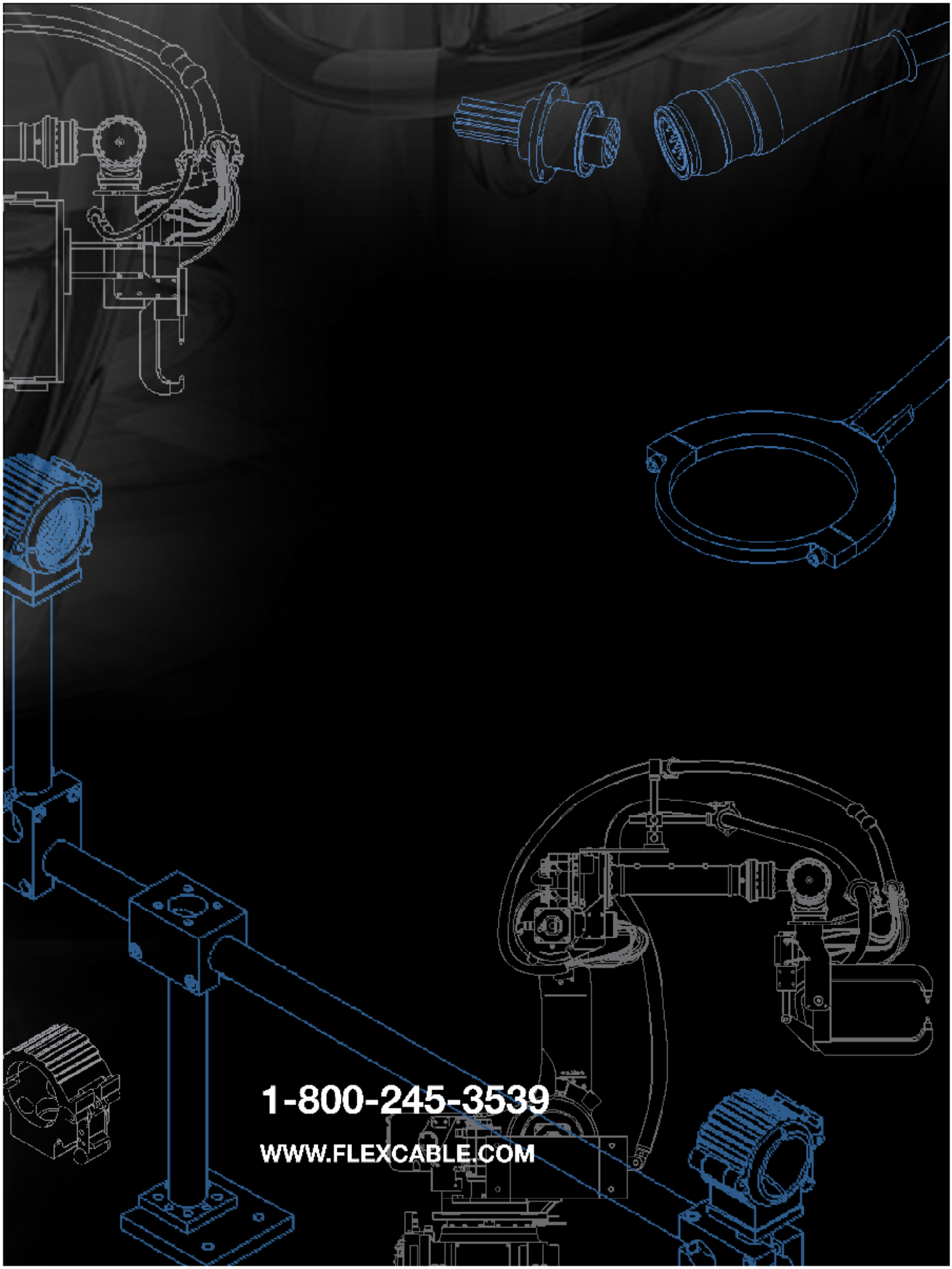

1-800-245-3539

WWW.FLEXCABLE.COM